REV.	ZONE	DESCRIPTION	CS/REL NO.	DATE	DESIGNED	CHECKED
1		INITIAL RELEASE		2021/04/06	BGUAN	XYU07

COVER ASSEMBLY DETAILS

SCALE 1:1

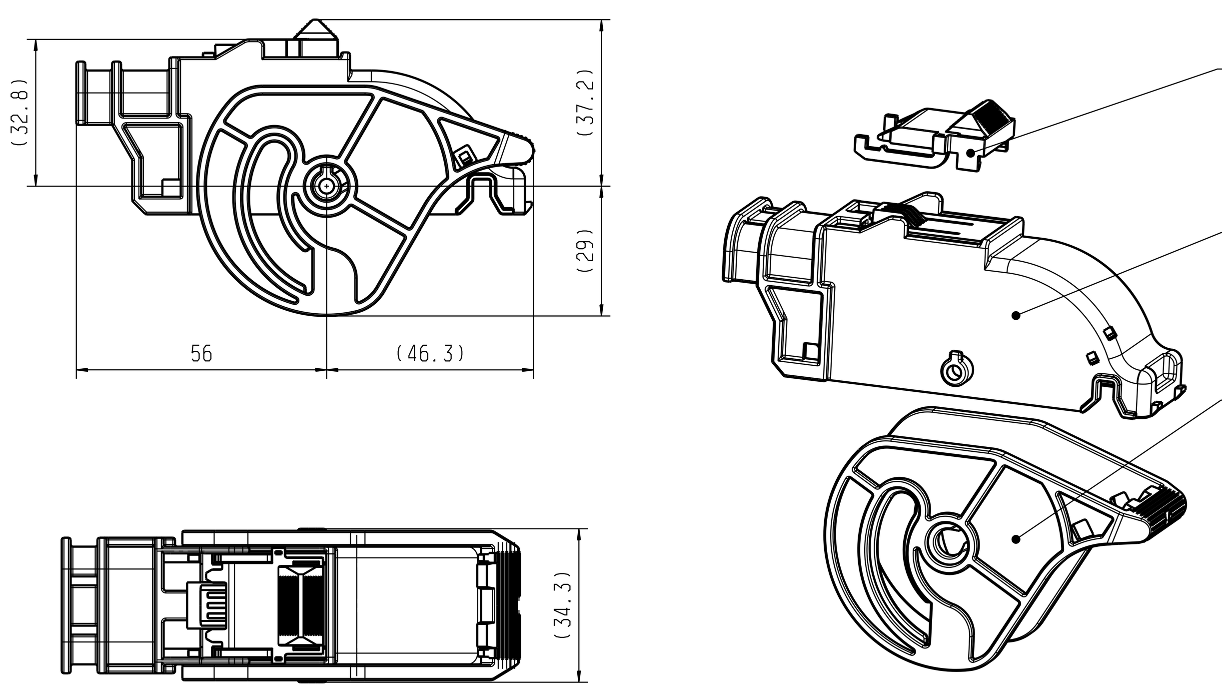

HOUSING ASSEMBLY DETAILS

SCALE 1:1

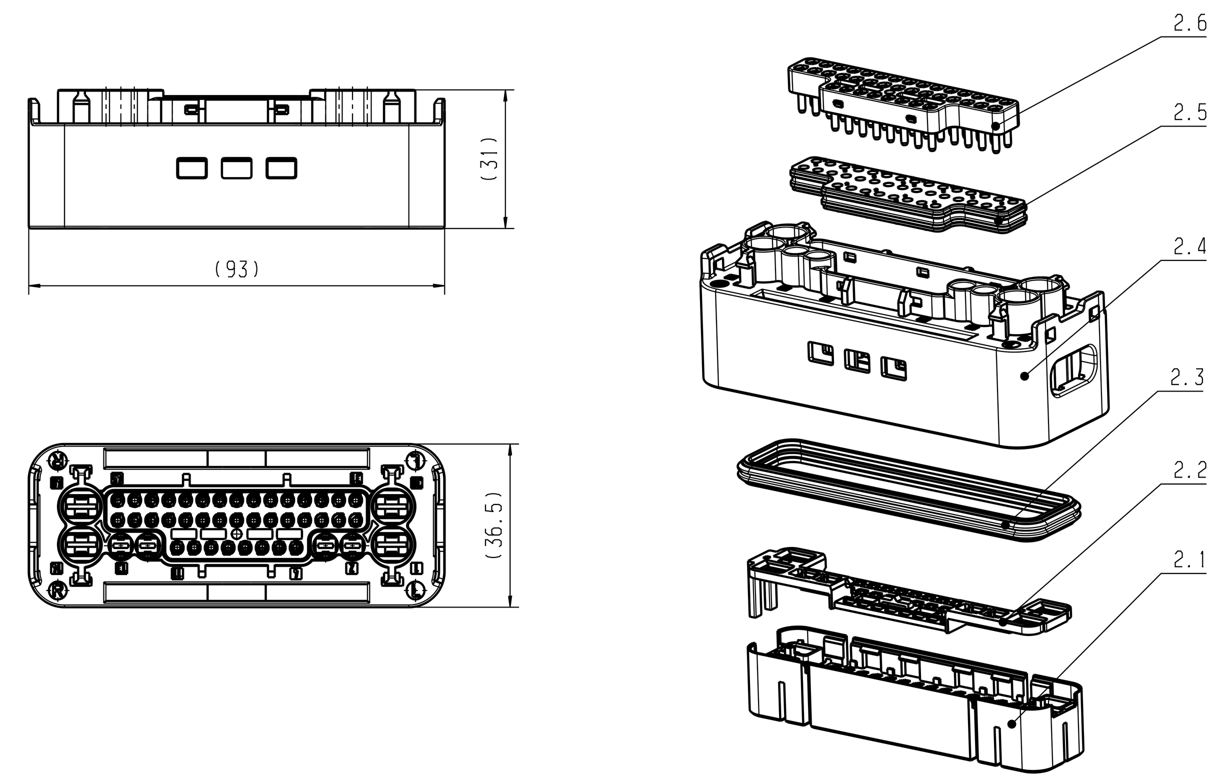

TPA POSITION

SCALE 10:1

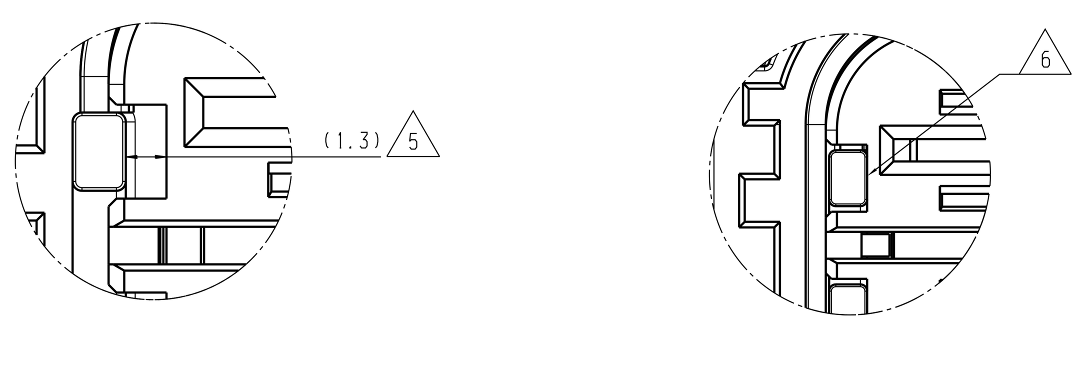

APPLICABLE TERMINALS

CAVITY NUMBER	LEAR PART				
	TERMINAL SERIES	TERMINAL PART NUMBER	WIRE RANGE (mm^2)	SURFACE	CABLE SEAL PART NUMBER
2, 3, 12, 13	MAK 28 PLUS	28319 000 001	0.5-1.0	SILVER	16695 627 642 16695 627 619 16276 627 642
		28435 306 709	0.5-1.0	GOLD	
		28319 306 185	0.5-1.0	TIN	
		28320 000 001	1.5-2.5	SILVER	16694 627 626 16260 627 626
		28434 306 709	1.5-2.5	GOLD	
		28320 306 185	1.5-2.5	TIN	
1, 14, 30, 46	MAK 63 PLUS	28365 000 001	1.5-2.5	SILVER	16696 627 694 16278 627 694
		28365 306 185	1.5-2.5	TIN	
		28366 000 001	2.5-4.0	SILVER	16697 627 626
		28366 306 185	2.5-4.0	TIN	
		28919 000 001	4.0-6.0	SILVER	16259 627 646
		28919 306 185	4.0-6.0	TIN	
4~11,15~29, 31~45	CLF 1.2	28907 000 002	0.35-0.5	SILVER	/
		28907 000 001	0.35-0.5	TIN	
		28908 000 002	0.75-1.0	SILVER	
		28908 000 001	0.75-1.0	TIN	

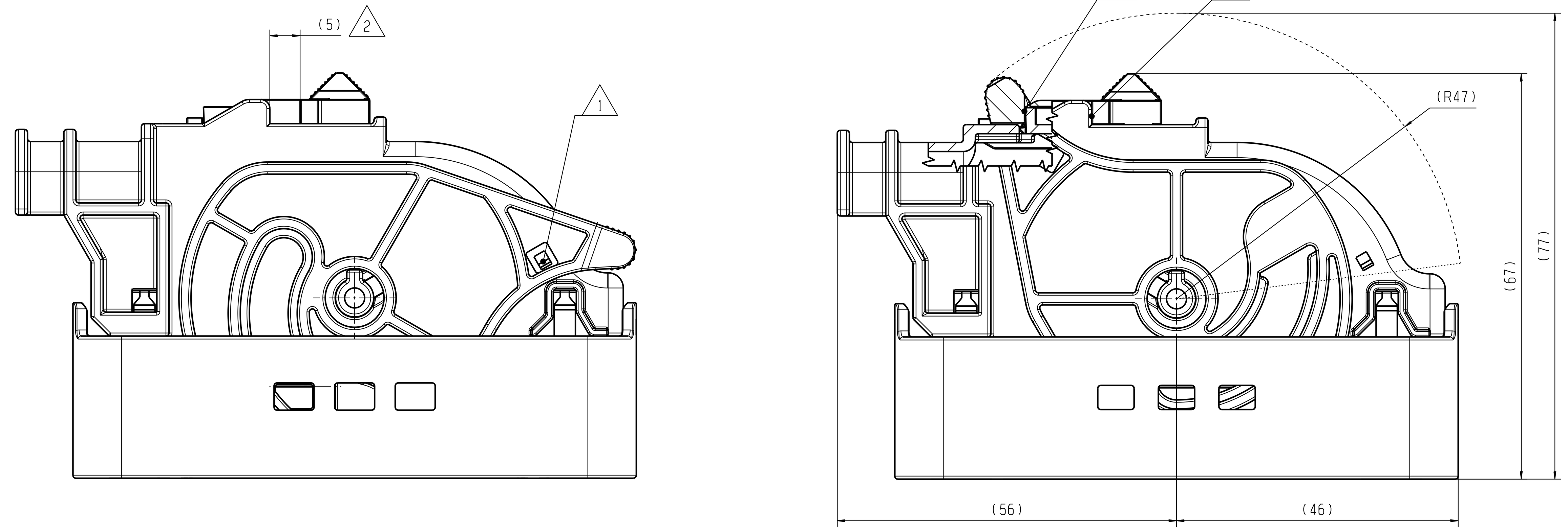

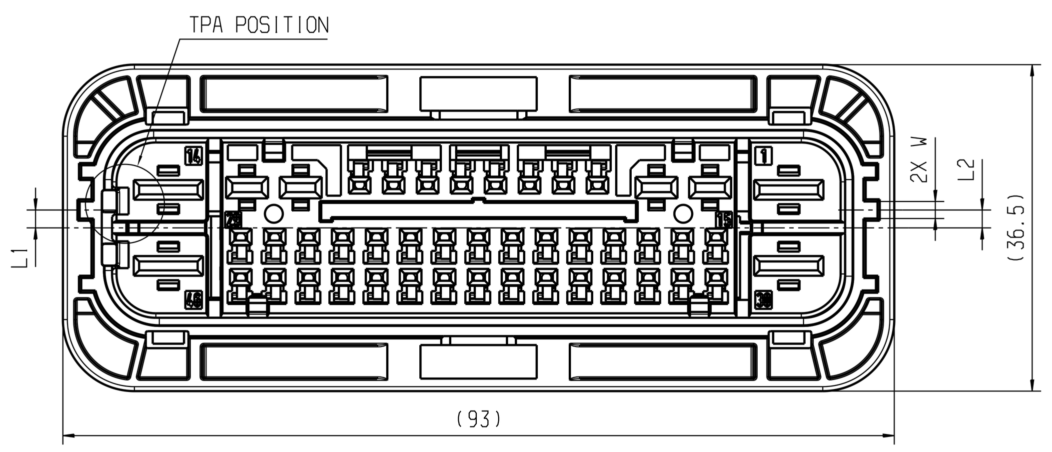

Coding	L1	L2	W
A	2	2	1.9
B	4	4	1.9
C	0	4	1.9
D	4	0	1.9
E	2	4	1.9
F	4	2	1.9
G	0	-2	1.9
H	-2	0	1.9
Z	0	0	9.9

COVER ASSEMBLY WITH CPA

SCALE 1:1

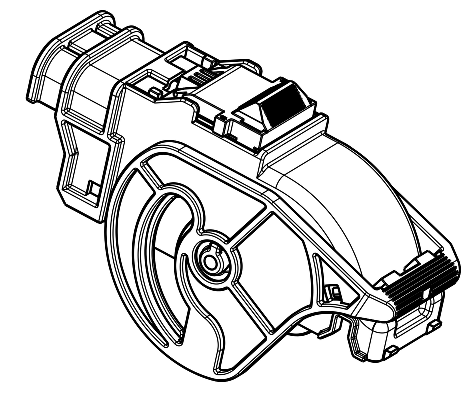

COVER ASSEMBLY WITHOUT CPA

SCALE 1:1

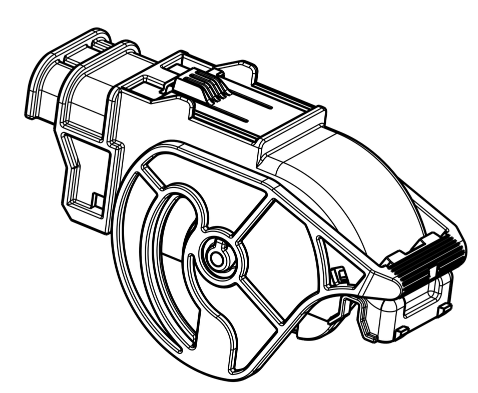

HOUSING ASSEMBLY

SCALE 1:1

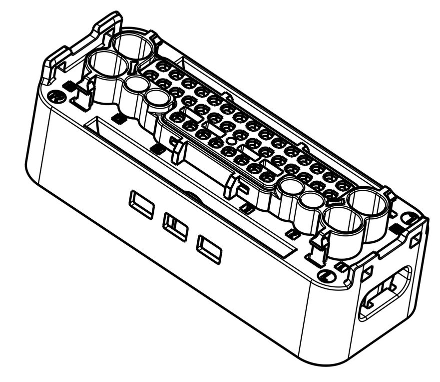

DEFINITION OF CABLE EXIT

SCALE 1:1

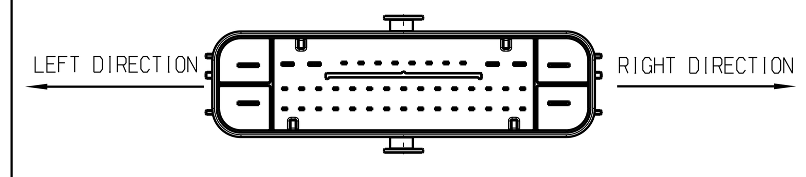

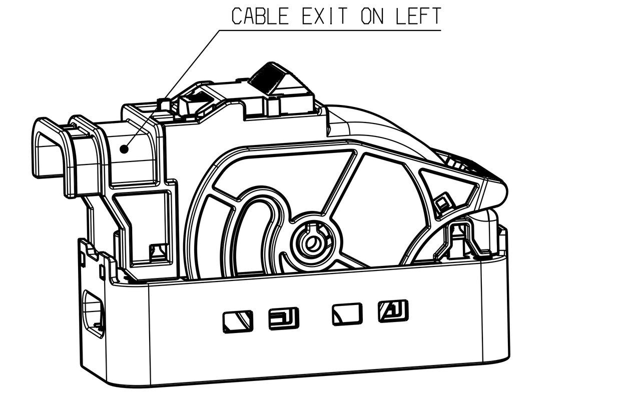

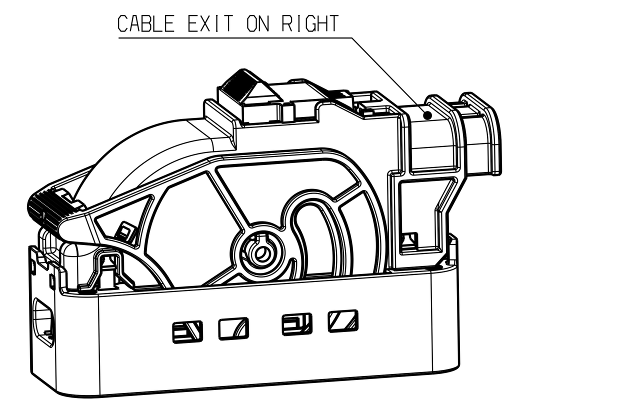

DETAILS OF COMPONENT ITEM 2.6

SCALE 5:1

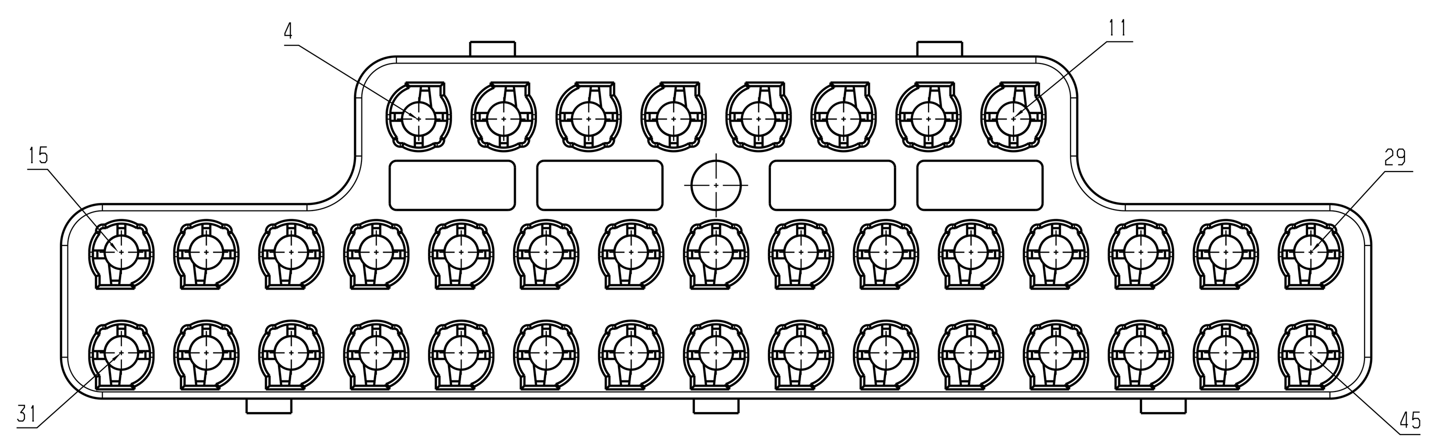

HOUSING ASSEMBLY PART NUMBER	ITEM 2.6 VARIANT (7)	4	5	6	7	8	9	10	11	15	16	17	18	19	20	21	22	23	24	25	26	27	28	29	31	32	33	34	35	36	37	38	39	40	41	42	43	44	45
...	...																																						
...	...																																						
...	...																																						
E25435400	005	X		X		X	X	X				X	X		X							X		X			X							X	X	X	X		X
E25435300	004	X		X		X	X	X				X	X									X		X			X							X	X		X		
E25435200	003	X		X			X								X							X					X								X	X	X		X
E25434200	002	X		X			X															X					X								X		X		
E14999600	001	ALL PINS REMOVED																																					

CAVITY (X=CAVITY CLOSED)

NOTES:

1. (1) DELIVER CONDITION: LEVER IN PRELOCKED POSITION
2. (2) DELIVER CONDITION: CPA IN PRELOCKED POSITION
3. (3) LEVER IN LOCKED POSITION
4. (4) CPA IN LOCKED POSITION
5. (5) DELIVER CONDITION: TPA IN PRELOCKED POSITION
6. (6) TPA IN LOCKED POSITION
7. (7) DETAILS OF ITEM 2.6 VARIANT IN THE LEFT TABLE
8. APPLICABLE TERMINALS SEE THE CHART
9. MATING INTERFACE DRAWING D00476819
10. OPTIONAL COVER ASSEMBLY WITH OR WITHOUT CPA
11. ACCEPT ANY MORE SPECIFIED ITEM 2.6 VARIANT BY CUSTOMER
12. ACCEPT DIRECTION OF CABLE EXIT ON RIGHT OR LEFT

ITEM 2.6 VARIANT	CODE	PART NUMBER	DESCRIPTION	COMPONENT ITEM	COMPONENT NAME	MATERIAL	COLOR	QUANTITY	WEIGHT (g)
...									
005	A	E25435400	HOUSING ASSEMBLY	(7) 2.6	RETAINER	PBT-GF20	NATURAL	1	58
				2.5	FAMILY SEAL	SILICONE	LIGHT BLUE	1	
				2.4	FRAME	PBT-GF20	BLACK	1	
				2.3	RADIAL SEAL	SILICONE	GREEN	1	
				2.2	TPA	PBT-GF20	NATURAL	1	
				2.1	FRONT HOUSING	PBT-GF10	BLACK	1	
004	A	E25435300	HOUSING ASSEMBLY	(7) 2.6	RETAINER	PBT-GF20	NATURAL	1	58
				2.5	FAMILY SEAL	SILICONE	LIGHT BLUE	1	
				2.4	FRAME	PBT-GF20	BLACK	1	
				2.3	RADIAL SEAL	SILICONE	GREEN	1	
				2.2	TPA	PBT-GF20	NATURAL	1	
				2.1	FRONT HOUSING	PBT-GF10	BLACK	1	
003	A	E25435200	HOUSING ASSEMBLY	(7) 2.6	RETAINER	PBT-GF20	NATURAL	1	58
				2.5	FAMILY SEAL	SILICONE	LIGHT BLUE	1	
				2.4	FRAME	PBT-GF20	BLACK	1	
				2.3	RADIAL SEAL	SILICONE	GREEN	1	
				2.2	TPA	PBT-GF20	NATURAL	1	
				2.1	FRONT HOUSING	PBT-GF10	BLACK	1	
002	A	E25434200	HOUSING ASSEMBLY	(7) 2.6	RETAINER	PBT-GF20	NATURAL	1	58
				2.5	FAMILY SEAL	SILICONE	LIGHT BLUE	1	
				2.4	FRAME	PBT-GF20	BLACK	1	
				2.3	RADIAL SEAL	SILICONE	GREEN	1	
				2.2	TPA	PBT-GF20	NATURAL	1	
				2.1	FRONT HOUSING	PBT-GF10	BLACK	1	
001	A	E14999600	HOUSING ASSEMBLY	(7) 2.6	RETAINER	PBT-GF20	NATURAL	1	58
				2.5	FAMILY SEAL	SILICONE	LIGHT BLUE	1	
				2.4	FRAME	PBT-GF20	BLACK	1	
				2.3	RADIAL SEAL	SILICONE	GREEN	1	
				2.2	TPA	PBT-GF20	NATURAL	1	
				2.1	FRONT HOUSING	PBT-GF10	BLACK	1	
/	/	E25466400	COVER ASSEMBLY WITHOUT CPA	1.2	COVER	PBT-GF20	BLACK	1	35
				1.1	LEVER	PBT-GF20	NATURAL	1	
/	/	E14999500	COVER ASSEMBLY WITH CPA	1.3	CPA	PA6-(GF10+GB20)	RED	1	37
				1.2	COVER	PBT-GF20	BLACK	1	
				1.1	LEVER	PBT-GF20	NATURAL	1	

GENERAL TOLERANCES DIN 16901 - xxx ISO 2768 - m	THE ENGLISH TRANSLATION IS BELIEVED TO BE ACCURATE. IN CASE OF DISCREPANCIES THE GERMAN VERSION SHALL GOVERN.	T&C PROJECT NUMBER TC-C17-0014	
ANGLE PROJECTION EU	MATERIAL: SEE TABLE FINISH / SURFACE: xxx COLOR: SEE TABLE	WEIGHT CAD: SEE TABLE [g]	VOLUME CAD: --- [mm³]
SCALE: 2:1	LEAR CORPORATION	Lear Corporation 833 Jiangpu Road Yangpu District Shanghai, China	
START DATE: 2020/07/10			
DRAWN: BGUAN	TITLE		
APPROVERS:	Connector_46way_F_Hybird_Sealed		
DRW FILE NAME: E14999500_E14999600_D00554029_CG_1	CAD DIRECTORY / CAD LOCATION: T&C MODEL FILE NAME: E14999500_2+E14999600_2		
LAST UPDATE 2021/04/06	SEM DOCUMENT ID / DRAWING NUMBER D00554029 — REV. 1	SHEET 1 OF 1	TYPE CG

CONFIDENTIAL - THIS DRAWING AND ALL INFORMATION DISCLOSED HEREIN ARE OWNED BY LEAR CORPORATION AND ARE NOT TO BE DISTRIBUTED OR DISSEMINATED IN ANY MANNER UNLESS EXPRESSLY AUTHORIZED IN WRITING BY LEAR CORPORATION.

Official current version only in LEAR T&C DB. In printed form no update information service.
Offizielle aktuelle Ausgabe nur in LEAR T&C DB. In gedruckter Form kein Änderungsdienst.
Catia V5 DIN A0