LEAR/SEM P/N	T&C P/N	GRIP TYPE	ANTI-ROTATION	GRIP CODE	WIRE RANGE mm²	WIRE RANGE AWG	ØN	A	B	C	D	J	K	M	N	L	R1	MATERIAL	PLATING	UNWINDING DIRECTION
E12044000	881820-B48	1	WITHOUT TAB	18	0.75	18	5.2	5.00	4.20	4.5	5.0	–	–	1.00	1.75	5.61	3.00	Cu	Pre-Sn	STD
E12044100	881825-B48						6.5											Cu	Pre-Sn	
320151608	881828-B48						7.1											Cu	Pre-Sn	
320150GM1	881835-B48						9.0											Cu	Pre-Sn	
E12044300	881840-B48						10.3											Cu	Pre-Sn	
E12043700	881420-B48			14	2.0	14-16	5.2	5.90	4.95	5.4	5.8	–	–	1.45	2.25	4.75	1.50	Cu	Pre-Sn	
320151F1U	881425-B48						6.5											Cu	Pre-Sn	
320257HS7	881428-B48						7.1											Cu	Pre-Sn	
320150GL3	881435-B48						9.0											Cu	Pre-Sn	
E12043800	881440-B48						10.3											Cu	Pre-Sn	
E12042900	881020-B48			10	5.0	10-12	5.2	7.45	7.05	6.4	7.4	–	–	2.3	3.2	4.75	1.50	Cu	Pre-Sn	
320151F1Q	881025-B48						6.5											Cu	Pre-Sn	
320257HN0	881028-B48						7.1											Cu	Pre-Sn	
320150G10	881035-B48						9.0											Cu	Pre-Sn	
E12043000	881040-B48						10.3											Cu	Pre-Sn	
E12043400	881320-B48	2		13	2.5	16+20,16+18, 18+18	5.2	5.20	6.00	5.2	6.9	1.00	1.40	1.00	1.75	4.75	1.50	Cu	Pre-Sn	
E12043500	881325-B48						6.5											Cu	Pre-Sn	
320151CM3	881328-B48						7.1											Cu	Pre-Sn	
320150GK5	881335-B48						9.0											Cu	Pre-Sn	
E12043600	881340-B48						10.3											Cu	Pre-Sn	
E12043100	881120-B48			11	4.0	16+16,12+20	5.2	6.35	7.10	6.4	8.1	1.35	1.60	1.45	2.25	4.75	1.50	Cu	Pre-Sn	
E12043200	881125-B48						6.5											Cu	Pre-Sn	
320257HQ4	881128-B48						7.1											Cu	Pre-Sn	
320150GJ7	881135-B48						9.0											Cu	Pre-Sn	
E12043300	881140-B48						10.3											Cu	Pre-Sn	
E12042500	880920-B48			9	6.0	12+12,12+14	5.2	6.85	6.50	7.0	9.35	1.52	2.9	1.78	3.56	4.75	1.50	Cu	Pre-Sn	
320151CL5	880928-B48						7.1											Cu	Pre-Sn	
E12042700	880935-B48						9.0											Cu	Pre-Sn	
E12042800	880940-B48						10.3											Cu	Pre-Sn	
E12044400	880920-D48			9	6.0	12+12,12+14	5.2	6.85	7.50	7.0	9.60	1.52	2.9	1.78	3.56	4.75	1.50	Cu	Pre-Sn	
E12044500	880925-D48						6.5											Cu	Pre-Sn	
E12044600	880928-D48						7.1											Cu	Pre-Sn	
E12044700	880935-D48						9.0											Cu	Pre-Sn	
E12044800	880940-D48						10.3											Cu	Pre-Sn	
E12047100	881820-Y48	1	WITH TAB	18	0.75	18	5.2	5.00	4.15	4.5	5.0	–	–	1.00	1.75	5.61	3.00	Cu	Pre-Sn	
E12047200	881825-Y48						6.5											Cu	Pre-Sn	
320151F6Y	881828-Y48						7.1											Cu	Pre-Sn	
E12047300	881835-Y48						9.0											Cu	Pre-Sn	
E12047400	881840-Y48						10.3											Cu	Pre-Sn	
E12046600	881420-Y48			14	2.0	14-16	5.2	5.90	4.95	5.4	5.8	–	–	1.45	2.25	4.75	1.50	Cu	Pre-Sn	
E12046700	881425-Y48						6.5											Cu	Pre-Sn	
E06922000	881428-Y48						7.1											Cu	Pre-Sn	
E12046800	881435-Y48						9.0											Cu	Pre-Sn	
E12047000	881440-Y48						10.3											Cu	Pre-Sn	
E12045300	881020-Y48			10	5.0	10-12	5.2	7.45	7.05	6.4	7.4	–	–	2.30	3.20	4.75	1.50	Cu	Pre-Sn	
E12045400	881025-Y48						6.5											Cu	Pre-Sn	
320151FPQ	881028-Y48						7.1											Cu	Pre-Sn	
E15327400	881028-Y48																			-05B
E12045500	881035-Y48						9.0											Cu	Pre-Sn	STD
E12045600	881040-Y48						10.3											Cu	Pre-Sn	
E12046100	881320-Y48	2		13	2.5	16+20,16+18, 18+18	5.2	5.20	6.00	5.2	6.9	1.0	1.40	1.00	1.75	4.75	1.50	Cu	Pre-Sn	
E12046300	881325-Y48						6.5											Cu	Pre-Sn	
320151CWW	881328-Y48						7.1											Cu	Pre-Sn	
E12046400	881335-Y48						9.0											Cu	Pre-Sn	
E12046500	881340-Y48						10.3											Cu	Pre-Sn	
E12045700	881120-Y48			11	4.0	16+16,12+20	5.2	6.35	7.10	6.4	8.1	1.35	1.60	1.45	2.25	4.75	1.50	Cu	Pre-Sn	
E12045800	881125-Y48						6.5											Cu	Pre-Sn	
E06921900	881128-Y48						7.1											Cu	Pre-Sn	
E12045900	881135-Y48						9.0											Cu	Pre-Sn	
E12046000	881140-Y48						10.3											Cu	Pre-Sn	
E12044900	880920-Y48			9	6.0	12+12,12+14	5.2	6.85	6.50	7	9.35	1.52	2.9	1.78	3.56	4.75	1.50	Cu	Pre-Sn	
E05544300	880925-Y48						6.5											Cu	Pre-Sn	
E06662300	880928-Y48						7.1											Cu	Pre-Sn	
E12045100	880935-Y48						9.0											Cu	Pre-Sn	
E12045200	880940-Y48						10.3											Cu	Pre-Sn	

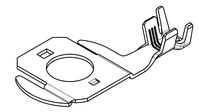

W/O ANTI-ROTATION TAB

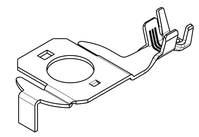

W/ ANTI-ROTATION TAB

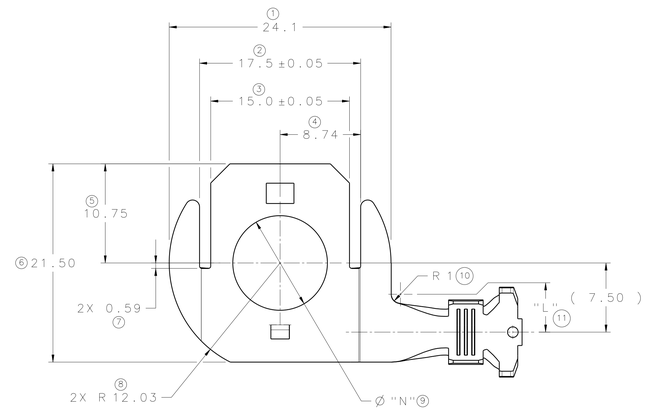

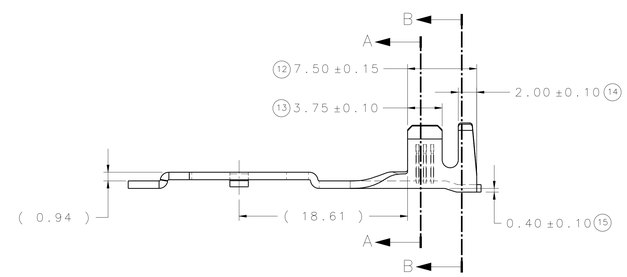

GRIP TYPE 1

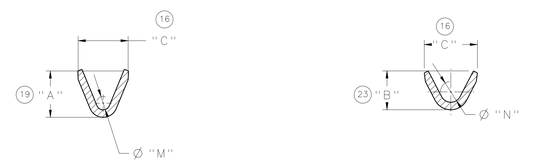

GRIP TYPE 2

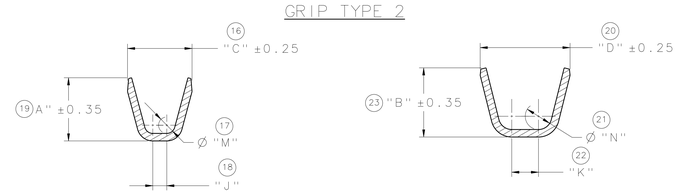

SECTION VIEW A-A

SECTION VIEW B-B

ANTI-ROTATION TAB OPTION
SAME AS PRIMARY VIEW EXCEPT AS SHOWN

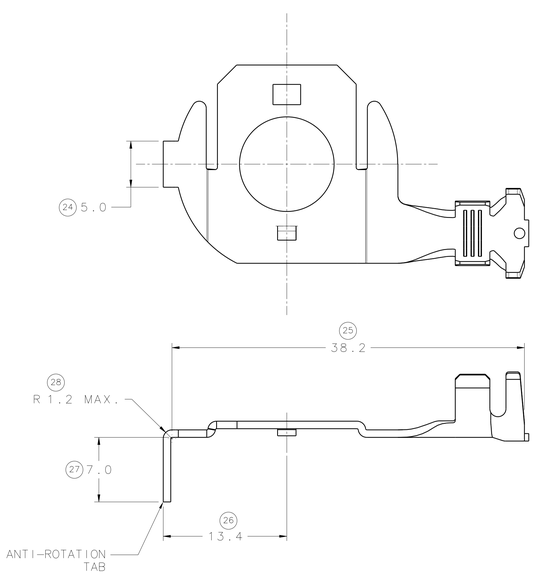

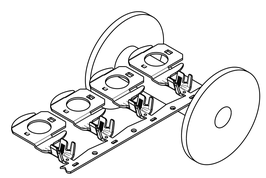

UNWIND DIRECTION (STD)

NOTES:

1. GENERAL TOLERANCE
   1.1 ONE PLACE : ± 0.25
   1.2 TWO PLACE : ± 0.13
   1.3 ANGULAR PLACE : ±3°
2. 0.50 MAX. CUT OFF
3. MATERIAL THICKNESS: 0.81
4. UNWINDING DIRECTION PER WINDING SPECIFICATION D00563600

REV.	ZONE	DESCRIPTION	CS/REL NO.	DATE	DESIGNER	CHECKER
AA	--	INITIAL RELEASE	XX.XXX	2017/10/12	RB	TSR
AB	H5 C1 E5	ADDED GPN E15327400. ADDED UNWINDING SPECIFICATION D00563600, ADDED UNWINDING CODE TO THE CHART	CN-0118218	2021/08/19	M.PRENDOL	S.RAHMAN
AC	--	ADDED DIMENSIONAL BALLOONS	CN-0118755	2021/10/08	M.PRENDOL	S.RAHMAN

ANGLE PROJECTION	MATERIAL:	SEE TABLE	WEIGHT CAD:	VOLUME CAD:
NA	FINISH / SURFACE:	SEE TABLE	N/A	N/A
	COLOR:	N/A		

NOT USED

SCALE: 4:1

START DATE: 2017/06/19

DRAWN: R.BERAME

APPROVER:
ENGR: S.RAHMAN
CHECKER: A.BUTCHER
APPROVER: B.RANGI
Bhupinder Rangi Digitally signed by Bhupinder Rangi Date: 2021.11.01 10:07:46 -04'00'

LEAR CORPORATION
ELECTRICAL
21557 TELEGRAPH ROAD
SOUTHFIELD, MI 48033

TITLE
MISC / CROSS CARLINE
INTERLOCKING GROUND TERMINAL
LEFT HAND

CAD DIRECTORY / LOCATION: SEM

DRAWING FILE NAME: D00457362-ACD000.CATDrawing

MODEL FILE NAME: E12045200/E12044800.CATPart

LAST UPDATE	SEM DOCUMENT ID / DRAWING NUMBER	REV.	SHEET	OF	TYPE
2021/10/08	D00457362 / 880920-B48	AC	1	1	CG

LAST USED 28

CONFIDENTIAL - THIS DRAWING AND ALL INFORMATION DISCLOSED HEREIN ARE OWNED BY LEAR CORPORATION AND ARE NOT TO BE DISTRIBUTED OR DISSEMINATED IN ANY MANNER UNLESS EXPRESSLY AUTHORIZED IN WRITING BY LEAR CORPORATION

TITLE BLOCK FILE IN PLM: title_block_e-ansi_rev-3.0001.CATDrawing

CATIA V5 R6X E ANSI